niimbus

HEADPHONE AMPLIFIER

NIIMBUS ULTIMATE SERIES
HPA US 4+

USER´s MANUAL

Content

CAUTION !!

THE HIGH OUTPUT LEVELS ACHIEVABLE WITH THIS UNIT MAY DAMAGE YOUR HEARING OR THE HEADPHONES IF OPERATED CARELESSLY !!

Cordial thanks for your decision in favour of a NIIMBUS product !

NIIMBUS is a trademark and product line of Lake People electronic GmbH. Lake People electronic GmbH develops, manufactures and distributes products in the professional range, for broadcast, television, airports, exhibition halls, festival venues, theatres, large-scale installations, private studios and more. In the private sector as well, Lake People products become increasingly popular due to their outstanding quality.
The NIIMBUS trademark and product line is specially intended to supply the Hi-Fi and High-End market with its specific requirements.

Who develops NIIMBUS equipment ?

NIIMBUS devices are exclusively developed in Germany by the engineers of Lake People electronic GmbH. In doing so, the team of developers can draw on over thirty years of experience and countless products for the pro-audio domain.
Among others, the first German-made 20-bit A/D and D/A converters were developed by Lake People in the early nineties of the past century.

Who manufactures NIIMBUS equipment ?

NIIMBUS devices are exclusively manufactured in Germany by Lake People electronic GmbH or contractors in the company's vicinity.
Lake People - and by association NIIMBUS - put high emphasis on domestic manufacturing. As well, all component suppliers are chosen in order to achieve the main part of added value inland.

How do NIIMBUS devices get to the customer ?

NIIMBUS devices can be obtained from respective specialist suppliers. If there is none such accessible regionally, the customer is supported by transregional distribution partners (google may help...) and, of course, by NIIMBUS on-line shop.

é and if it doesn't work like it should ?

NIIMBUS devices are covered by a 5-years warranty. In case of any malfunction during this period, they can be shipped to the manufacturer directly. Of course, the client will benefit from NIIMBUS full technical support even when warranty has expired. Any technical questions or need for advice is welcome.

NIIMBUS **is a subsidiary of**

LAKE PEOPLE

LAKE PEOPLE electronic GmbH
Turmstrasse 7a
D-78467 Konstanz

Fon +49 (0) 7531 73678
Fax +49 (0) 7531 74998

www.lake-people.de
www.lake-people.com
www.NIIMBUS-audio.de
www.NIIMBUS-audio.com
www.violectric.de
www.violectric.com

General Safety Instructions

WARNING

For your protection, please read the following:

Water, Liquids, Moisture:
This appliance should not be used near water or other sources of liquids.
Care should be taken so that objects do not fall and liquids are not spilled into the enclosure through openings.

Power Sources:
The appliance should be connected to a power supply only of the type described in the operating instructions or as marked on the appliance.

Grounding:
Care should be taken that this appliance is operated with proper grounding only.

Power Cord:
Power supply cords should be routed so that they are not likely to be walked on or pinched by items placed upon or against them, paying particular attention to cords at plugs, convenience receptacles, and the point where they exit from the appliance.
This unit is equipped with a 3-pole mains cable with German 3-pin mains plug.
In some countries this unit must be operated with a mains adaptor, supplied by the owner.
Please refer to the table below to connect a mains plug:

OVERVIEW: POWER CORD FUNCTION AND COLORS			
CONDUCTOR		COLOR	Alternativ
L	LIVE	BROWN	BLACK
N	NEUTRAL	BLUE	WHITE
E ⏚	PROTECTIVE EARTH	GREEN+YELLOW	GREEN

U.K. Mains Plug Warning:
A moulded mains plug that has been cut off from the cord is unsafe.
Discard the mains plug at a suitable disposal facility.
NEVER UNDER ANY CIRCUMSTANCES SHOULD YOU INSERT A DAMAGED OR CUT MAINS PLUG INTO A 13 AMP POWER SOCKET. Do not use the mains plug without the fuse cover in place.
Replacement fuse covers can be obtained from your local retailer.
Replacement fuses are 13 amps and MUST be ASTA approved to BS 1362.

Mains Fuse:
The mains fuse of this appliance is soldered in place and accessible from the inside only!!
A blown fuse may indicate an internal problem and should be replaced during qualified servicing or repair work !!

Switchable Power Supply:
Connect this unit to the power source indicated on the equipment rear panel only to ensure safe operation !!
This unit is provided with an internally settable mains supply for 115 / 230 V AC.

Service / Repair:
To reduce the risk of fire or electric shock, the user should not attempt to service the appliance beyond the measures described in the operating manual. All other servicing or repair should be referred to qualified personnel !!

VOR DEM ÖFFNEN NETZSTECKER ZIEHEN!! PULL MAINS BEFORE OPENING!! AVANT D´OUVRIER RETIREZ LA FICHE MALE!!

Electromagnetic Compatibility
This unit conforms to the Product Specifications noted as **Declaration of Conformity** at the end of this manual. Operation is subject to the following conditions:

- this device may not cause harmful interferences
- this device must accept any interference received, including interference that may cause undesired operation
- this device must not be operated within significant electromagnetic field

The Earth / Grounding Concept

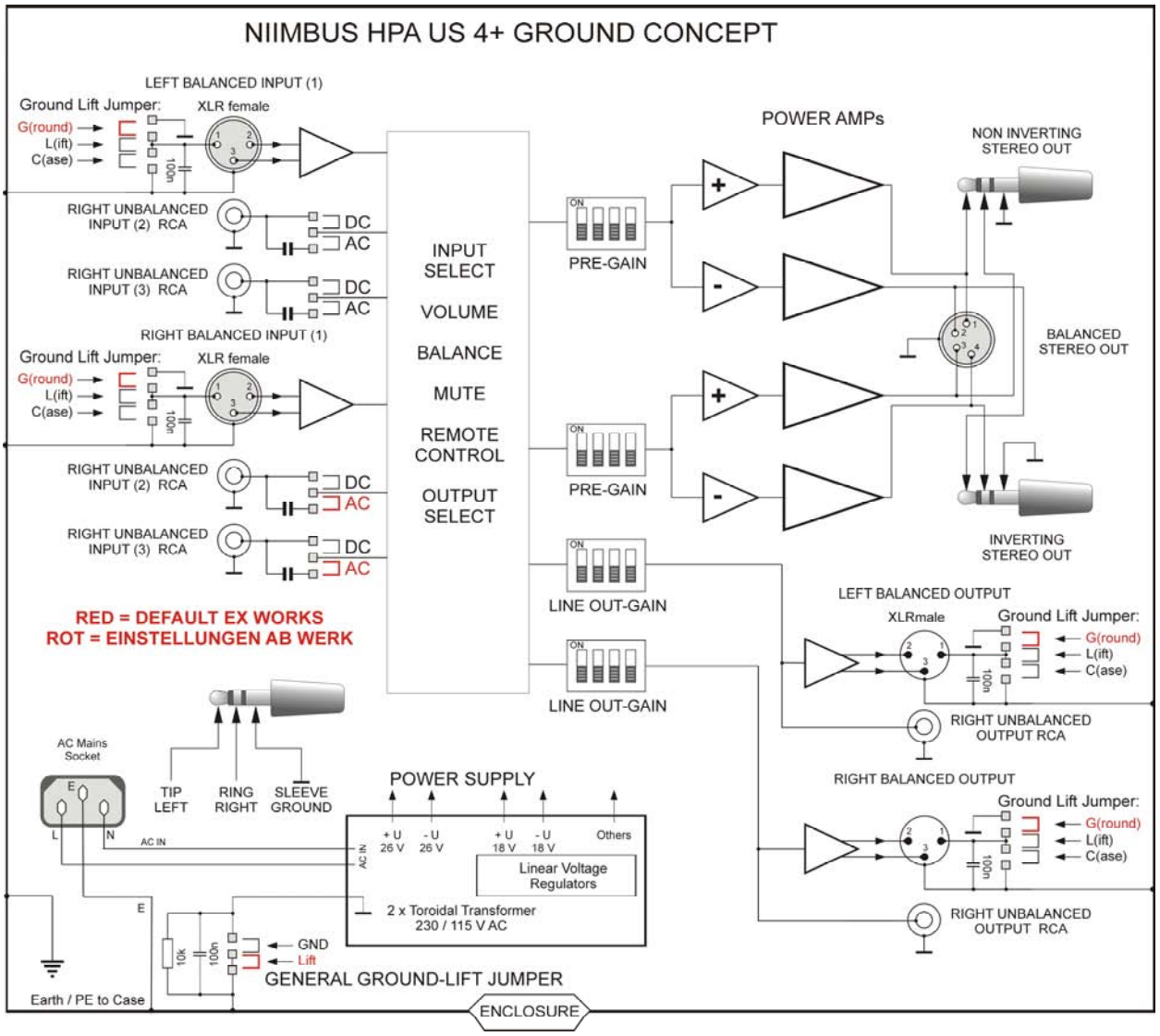

General GROUND-LIFT Jumper (accessible from the inside.
Mind the SECURITY INSTRUCTIONS !!):

Ex-works this jumper is set to the **LIFT** position.
The internal ground potential is ñliftedò by means of this jumper.
As a result, the interconnection for DC voltages and lower frequencies (< 150 Hz) will be cut. Higher frequencies will be bled off to earth potential through the RC filter. The LIFT position is helpful in case of hum or jitter caused by different ground/earth potentials.
Of coarse full electrical protection is granted as the case is always connected to ground/earth potential !

See page 28 / 29 "Jumper Settings" for details.

Unfortunately there is no general recommendation how to solve hum and jitter problems - or even minimize them. The best way to succeed is to check different options !! In case of balanced cables, it should always been verified if the shield of the cable is connected to the shell of the XLR connector. The shell is ALWAYS connected to earth potential when the connector is inserted !!

Concerning ANALOG inputs and outputs, the relationship between ground and earth may be modified. Electrical safety is always ensured, since the earth conductor is permanently ó
connected to the enclosure !!

XLR GROUD-LIFT Jumper
(Accessible from the inside. Mind the SECURITY INSTRUCTIONS !!):

G(ROUND): Ex-works all jumpers are set to "**G"** (ground) position.
Pin 1 is connected to the internal ground reference.
High frequency interference is deflected to the case via a 100 nF capacitor.

L(IFT): The interconnection between Pin 1 and ground is open. High frequency interference is deflected to the case via a 100 nF capacitor. This jumper position is specifically useful if the unit is equipped with audio-transformers !!

C(ASE): Pin 1 is connected to the case, the 100 nF capacitor is bridged. This jumper position may be varied together with the **General GROUND-LIFT jumper**.

Please note that with jumpers not in the ex-works position
EMC emission might occur,
for which the user is responsible only !
So, only change these settings when you know what you are doing !!

Connection / Connectors for Analog Signals

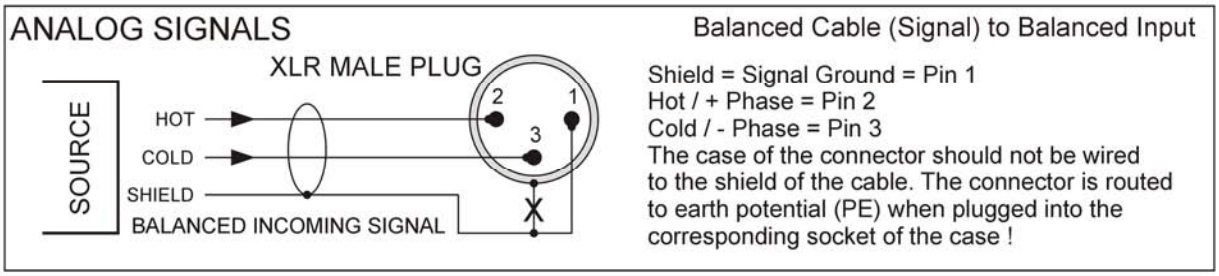

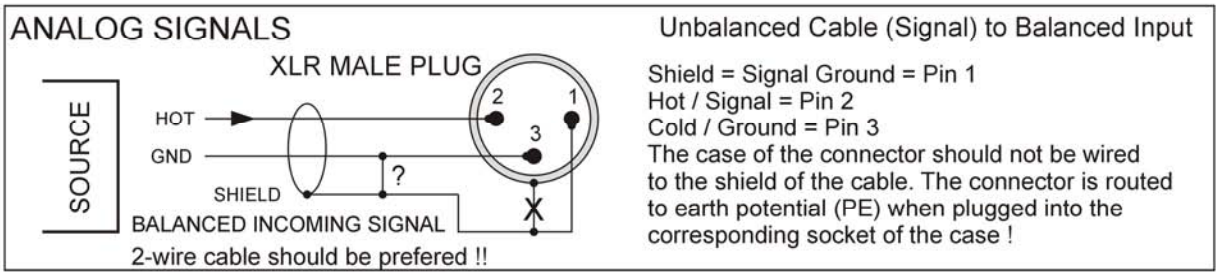

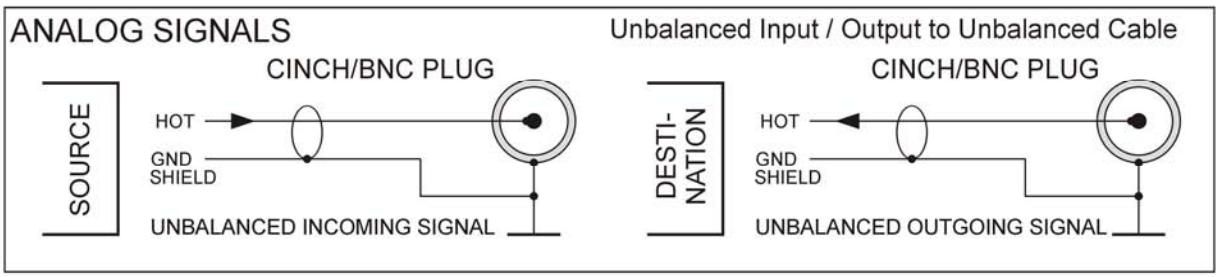

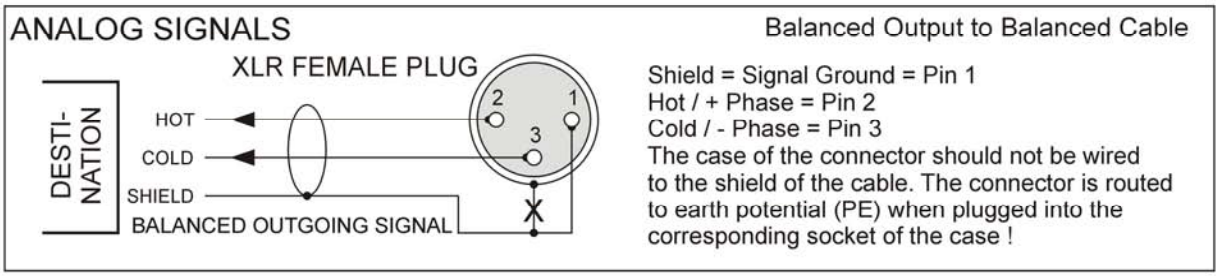

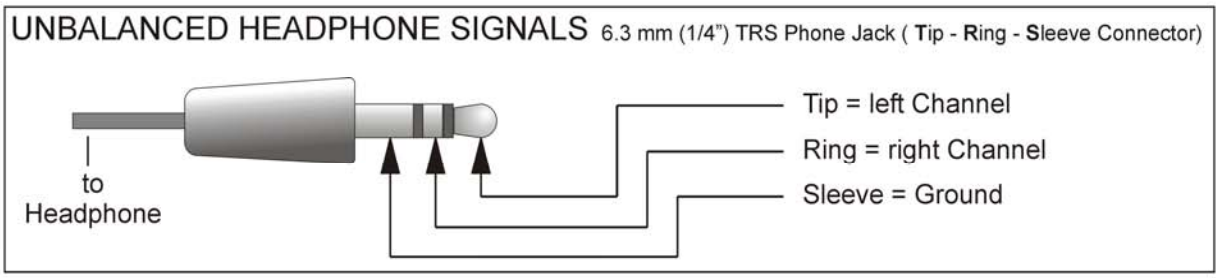

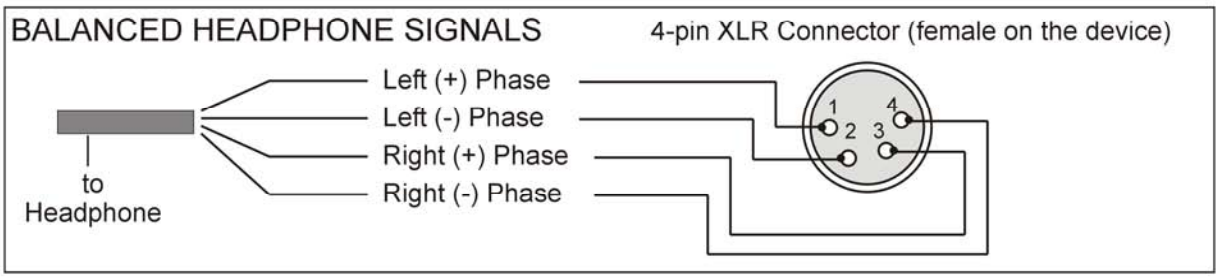

GENERAL INFORMATION

The NIIMBUS HPA US 4+ is a stereophonic headphone amplifier designed to drive low-, medium- and high-Z loads (16...600 ohms) as usually represented by high-quality headphones.
Because of its four built in amplifiers and the 4-pin XLR socket on the front it is also best suited to connect balanced headphones.
Due to its specific, highly variable, low-noise and low distortion circuit design especially optimised for dynamic and orthodynamic headphones, the NIIMBUS HPA US 4+ fulfils even highest demands.

Features:

- 1 x stereo balanced inputs with gold-plated Neutrik XLR connectors
- 2 x stereo unbalanced inputs with gold-plated full metal premium RCA connectors
- All three inputs selectable on the front panel
- **PRE-GAIN** = switchable input gain in eight steps -15/-12/-6/0/+6/+12/+18/+24 dBr
- Balanced and unbalanced stereo line outputs with RCA resp. XLR sockets, gold plated, pre-post fader assignable
- Independent channel design
- Volume control with 256 steps of 0.4 dB through reed relay attenuator
- Balance control
- Remote controlled and motorized volume control, input/output selection, mute
- High-Quality op-amps in the signal path
- High-quality MKP capacitors in the signal path
- 0.1 and 1% metal film resistors throughout the unit
- **4 Discrete-design power amps with 8 transistors per channel**
- Output management: headphones active / line-out active / both active / none active (mute)
- 2 x 6.3 mm (1/4ò) silver-plated Neutrik headphone outputs
- 1 x 4-pin XLR socket, gold plated for balanced headphones
- delayed relay-based headphone output during power on / instant cut-off for power off
- 2 x toroidal transformers, 25 + 25 W
- Large filtering capacitors in the power supply (> 50.000 uF)
- Switchable ground lift
- Rugged steel case with metallic coating
- Solid, 10 mm aluminium front panel

With its dimensions, the NIIMBUS HPA US 4+ ensures optimum flexibility combined with high output power. During design, high emphasis was put on operational safety even when the unit is operated inappropriately.
The NIIMBUS HPA US 4+ is equipped with safety circuitry and internal filters to prevent damage to the connected headphones due to DC voltages at the outputs, overload, over temperature and high-frequency overload beyond the audible range.

THE CASE

of NIIMBUS HPA US4+ is made of 2 mm sheet steel and a thick 10 mm aluminium front panel.
This choice of material ensures high mechanical stability and resistance whilst maintaining a high optical and haptic quality.

GROUND AND PROTECTIVE EARTH

The case of NIIMBUS HPA US 4+ is connected to protective earth.

POWER SUPPLY

Mains power is provided via a three-pin IEC/CEE socket and mating "cold-appliance" mains cord with Schuko-type plug for units purchased in middle Europe.
The device is set to 230V mains, whereas the actual voltage may vary between 190 and 240 volts for flawless operation.
The mains voltage may be altered to 115 V AC supply inside the unit with the aid of a mains voltage selector. In this case stable operation is granted in a range of 85 to 120 V (see page 32).
Two toroidal transformers each with 25 Watt are providing the internal operating voltages of +/-30 V. Out of these voltages some more operating voltages are generated.

MAINS FUSE

The 0.25A time-lag fuse is soldered in place on the circuit board. In case, it must be replaced with a fuse of the same type only.

CAUTION !!
MIND THE SAFETY INSTRUCTIONS:
A blown fuse indicates an internal fault and should be replaced during qualified repair or servicing only !!

THE REMOTE CONTROL FOR NIIMBUS HPA US 4+

Function

This remote control sends out infrared rays.
For that purpose there is a infrared LED on the front.
The remote control should point in direction of the target device to obtain best functionality.
The operating distance is about 5 - 7 meters (15 ï 20 ft).
With the ñVolume +ñand ñVolume -ñbuttons the volume of NIMBUS HPA US 4+ can be altered. This is done with a motor inside the amp to get the volume knob into motion.
With the ñMuteñbutton the internal mute function is engaged.
A direct ñMuteñ can only be released by the remote control.
With the ñInput 1 / 2 / 3ñbuttons one of the three inputs may be selected.
With the ñLine-Outputñand ñHead-Outputñbuttons you can control whether the front panel headphone outputs are active or the back mounted line outputs ï or both !

(pictures show the original size of the remote control)

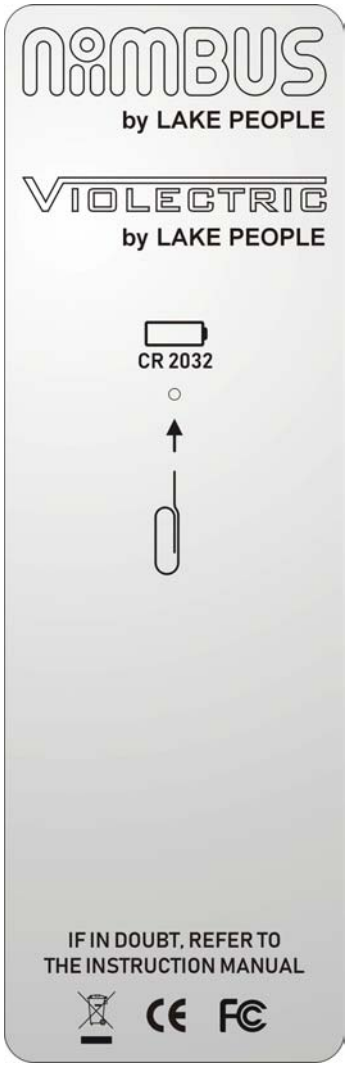

Maintenance

The remote control is powered by a little ñCR2032ñsize lithium battery.
The battery diameter is 20 mm, the hight is 3,2 mm ï that´s where the name comes from.
If you share the opinion that the battery is empty you may check this with the aid of your smartphone. The camera function reacts on the infrared rays of the remote control with cannot be seen with human eyes.
So just point the remote control to the camera of your smart phone and press a button. When you don´t see any action the battery is empty.
Take a paperclip or something similar and bend it like indicated on the back of the remote control. Plug it in the little hole to force the keypad to come out the aluminium frame ï it is held by magnets.
Now you can carefully take off the electronics to replace the battery.
The (-) pole must point to the PCB.
The (+) pole is the wider part and normally denoted.
It has to point ñupwardsò
Re-assemble the keypad, take care of the infrared LED !

Block circuitry NIIMBUS HPA US 4+

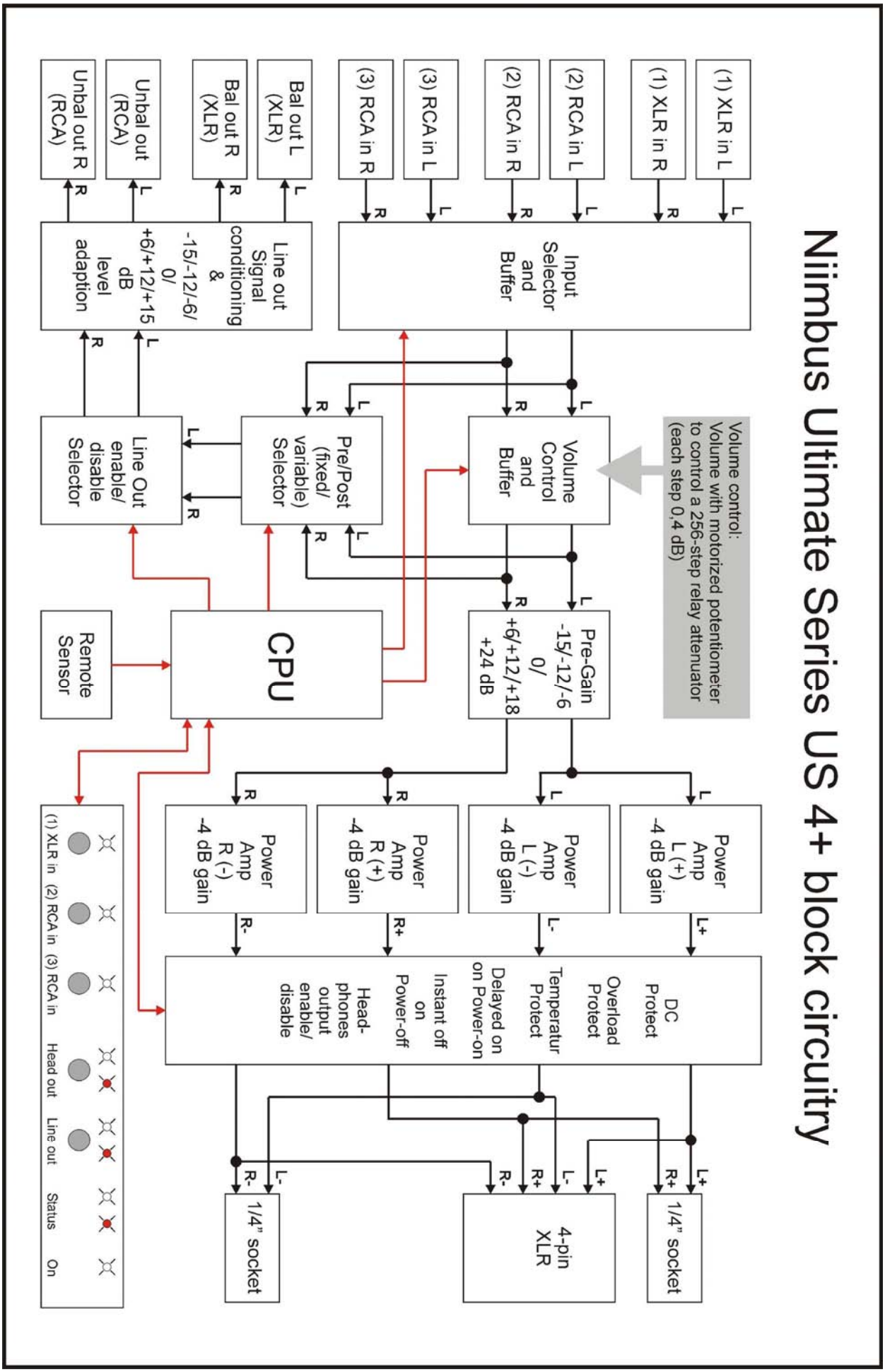

THE POWER-SWITCH

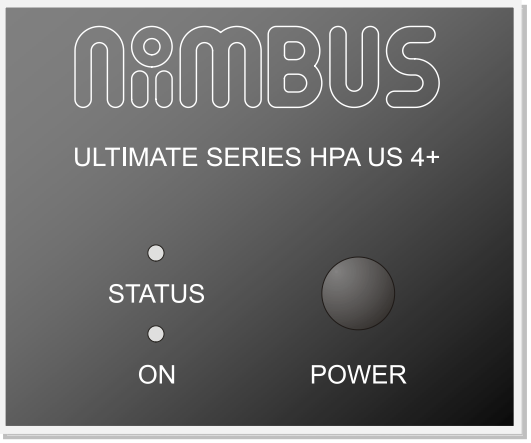

The unit is put into operation by means of the power switch.
Power-on status is indicated by the white ñONò LED.
The power-on procedure takes about 5 seconds.
During this time the ñSTATUSò LED is red and turns white when all internal parameter checked.
Also the LED of the last selected input is flashing and the outputs are muted.
Always the last setting is recalled.

THE SIGNAL INPUTS

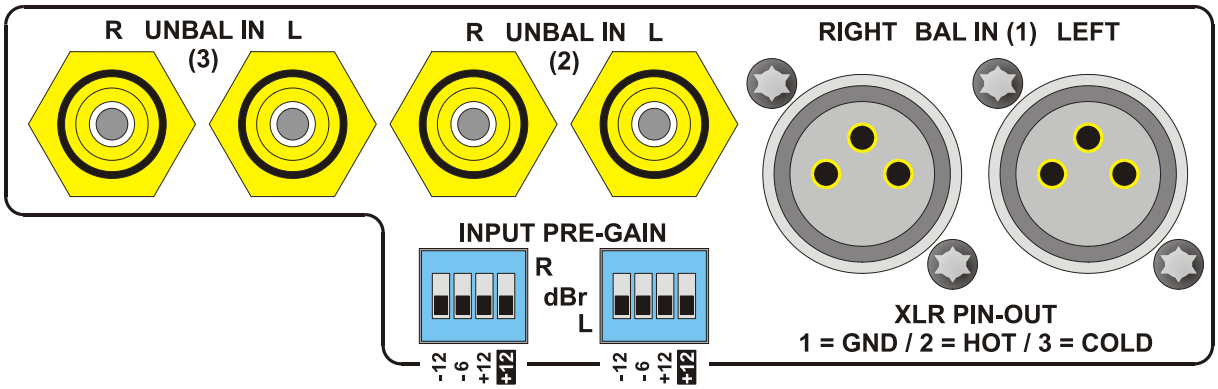

THE BALANCED SIGNAL INPUTS

are situated on the rear panel of the unit and are labelled as "BAL IN (1) LEFT" and "BAL IN (1) RIGHT".
They are fitted with gold plated XLR sockets from Neutrik.
Input impedance is 10 kohms.
Maximum input level should not exceed +21 dBu.
Please note:
Unbalanced signals can be injected as well by means of an adaptor.
Also see page nn.

Balanced XLR pin-out:	
PIN 1	GND
PIN 2	(+) PHASE
PIN 3	(-) PHASE

THE UNBALANCED INPUTS

For the use with unbalanced signals, gold plated full metal premium RCA sockets are provided.
They are labelled as "UNBAL IN LEFT" and "UNBAL IN RIGHT" ñ2ò and ñ3ò
Input impedance for these inputs is 10 kohms.
Maximum input level should not exceed +21 dBu.
This value is reduced to +15/+9 dBu if **PRE-GAIN** is set to +6/+12 dB or higher !!

INPUT PRE-GAIN

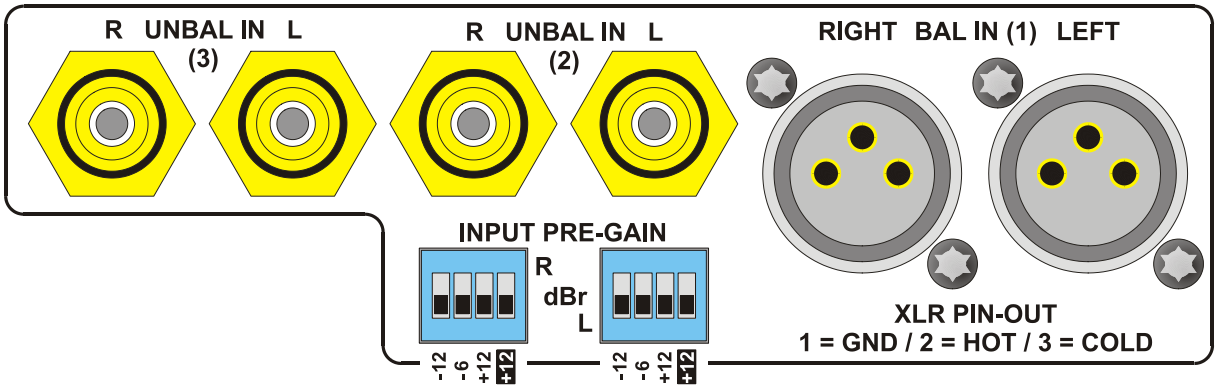

These DIP-switches are situated on the back of the unit inside the field of the analogue inputs.
Settings can be made for the left and right channel, they shall not be different from each other.
With these switches an additional gain or attenuation may be set.
It is dependent on the output level of the input source and the sensitivity of the headphones connected.
By this measure it is maintained to achieve lowest possible noise and maximum travel of the volume attenuator. The high gain/attenuation range of about 40 dB ensures a perfect match of any source with any headphone in the market.

Please see page 16 to learn more about: ñToo loud ? Too soft ? The PRE-GAIN methodò

SELECTING / ACTIVATING AN INPUT

With the ñ1 - XLR / 2 - RCA / 3 - RCAñbuttons on the front panel of NIIMBUS HPA US 4+ one of three analogue inputs can be activated. The corresponding LED is illuminated.
You can also use your remote control for this purpose:
Press ñINPUT 1ñon the remote control for input 1 - XLR
Press ñINPUT 2ñon the remote control for input 2 - RCA
Press ñINPUT 3ñon the remote control for input 3 - RCA

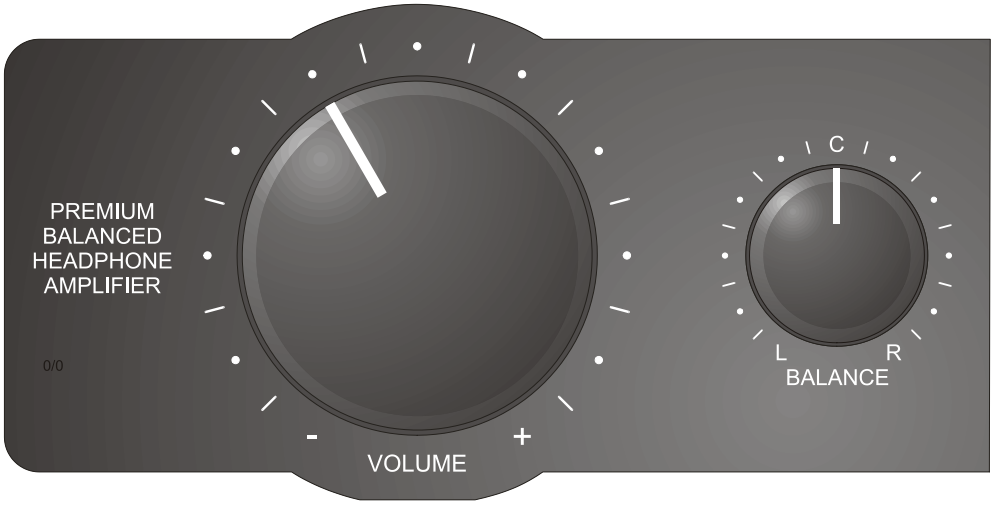

THE VOLUME ATTENUATOR

is to set the desired volume for the left and right channel simultaneously.
Volume can also be set via your remote control. For this purpose, the volume control is actuated by a servo motor. Manual operation of the knob at the same time is possible without the risk of damage (although not usefulé).
Press the ñVolume + / -ò button on the remote control in order to increase or decrease volume.
The volume attenuator itself is very special.
Attenuation is made in 256 step of 0.4 dB each. The steps are switched with special ñreed relaysò
Here, the switching contacts are situated in a glass tube filled with a protective gas.
The contacts are actuated by a magnetic field.

BALANCE CONTROL

is provided to compensate moderate level differences between left and right channel. These may root in the recorded material itself, noticeable differences between left and right headphone system, or differences in the usersô individual hearing.
All of the above can be carefully compensated.
The balance control offers a precise center detent in case no adjustment is necessary. In order not to impair the perfect crosstalk specs of HPA US 4+, it takes effect on the right channel only.

THE AMPLIFIER(S)

The input signals are fed to an amplifier stage especially designed for this application, with eight transistors per channel. The HPA US 4+ houses no less than four of those ! Channels are physically separated from each other to ensure optimum crosstalk rejection.
The frequency range covers 5 Hz ... 250 kHz (-0.5 dB) in order to ensure fully linear performance within the entire audible range. Overall gain is set to -4 dB (unbalanced) or +2 dB resp. (balanced) to ensure lowest self generated noise.

Too loud ? Too soft ? The PRE-GAIN method

The NIIMBUS HPA US 4+ is specially designed to drive headphones. To do so it is placed between up to three sources and the headphones. Headphones however can present load impedances from 8 to 2000 ohms and efficiency ratios from 85 to 115 dB per Milliwatt. The sources may have output levels between 0.5 Volt up to 10 Volt. Thus it can be quite tricky to fulfil all demands, since...

é owners of high-efficiency headphones will rarely set the volume control higher than 9 o'clock in order to exclude hearing damage, while

... the maximum setting may still be too soft for low-efficiency headphones, but

é all users expect highest quality at lowest noise and distortion.

Thus, the *circuitry* must adapt itself as the headphone won't !

WE CALL THE SOLUTION TO THIS PROBLEM **PRE-GAIN**

A single amp of NIIMBUS HPA US 4+ has no gain but an attenuation of -4 dB (about 60 % of the input signal). In case a balanced headphone is connected two amps are active with a combined gain of +2 dB (about 140 % of the input signal).
By this measure the amps will produce an extremely low self-generated noise which can hardly been heard even with highest sensitive in-ear-monitors (IEM).
On the other hand the very powerful amps of HPA US 4+ with their high operating voltage are able to drive low efficiency or high impedance headphone to the full with easel. You will be unable to find a headphone which cannot easily be driven by HPA US 4+. This effortless action will save your precious headphones as they will never see a distorted signal from the amp.
The alignment between amplifier and headphone is provided by the preamp stage, which can boost or attenuate the input signal in eight steps of -15 / -12 / -6 / 0 / +6 / +12 / +18 / +24 dBr. For this purpose, two switching devices are located on the rear panel for left and right channel individually.

HOW TO OPTIMIZE THE PRE-GAIN SETTING:

Connect your source to NIIMBUS HPA US 4+ and plug in your headphone.
Listen !!
Your amp is adjusted best by the individual PRE-GAIN setting when the volume control for ñnormalò listening is positioned around 12 o´clock.
So it is provided that there is enough attenuator travel to boost the signal through lower level passages or to listen with higher volume.
On the other hand the attenuator travel is optimized to reduce the self-generated noise from the amp.
In case you cannot reach the 12 o´clock position because the input signal is too loud, feel free to reduce the signal with the PRE-GAIN steps -6 / -12 / -15 dBr.
In case the signal is too soft even with volume settings above 12 o´clock please use the PRE-GAIN settings +6 / +12 / +18 / +24 dB to achieve more gain.

CAUTION !!

To avoid unwanted level leaps the settings should be altered under the following conditions only:

- The unit should ï but must not - be switched OFF
- the "VOLUME" control should be set to minimum
- left and right channel settings should be the same
- avoid to increase the setting by more than ONE step above

Ex-factory, all switches are set to their lowest position - i.e. 0 dB PRE-GAIN - which should be sufficient for most applications.

THE INPUT PRE-GAIN SETTINGS

Ex works all switches are set to the lower position.

PRE-GAIN -15 dB 1 + 2 = On		PRE-GAIN +6 dB 2 + 3 = On	
PRE-GAIN -12 dB 1 = On		PRE-GAIN +12 dB 3 = On	
PRE-GAIN -6 dB 2 = On		PRE-GAIN +18 dB 2+3+4 = On	
PRE-GAIN 0 dB All = Off		PRE-GAIN +24 dB 3 + 4 = On	

Ex works setting

So, if you share the opinion that your amp could act a bit softer you may set the ñ+6 dBò and or ñ+12 dBò dip switches to ñONò position. Both switches ñONò mean ñ+15 dBò.
If your amp should have more juice take the positive levels into account from ñ+6 dBò, meaning double gain, up to ñ+24 dBñ, meaning sixteen-fold gain.

Other that the above shown switch positions are senseless but harmless.

DE- / ACTIVATING THE HEADPHONE OUTPUTS:

Pressing the "PHONES OUT" button will activate or deactivate the headphone outputs.
The white LED shows the activated state.
The red LED shows the deactivated state.
This procedure is also maintained by the ñOUTPUT / HEADò button of the remote control.

DE- / ACTIVATING THE LINE OUTPUTS:

Pressing the "LINE OUT" button on the front panel will activate or deactivate the line outputs situated on the back panel.
The white LED shows the activated state.
The red LED shows the deactivated state.
This procedure is also maintained by the ñOUTPUT / LINEò button of the remote control.

HINT:

When the "MUTEñ Button of the remote control is pressed, all outputs from HPA US 4+ are muted, this concerns the back mounted line outputs and the front mounted headphone outputs.
The front LEDs from "PHONES OUTñ and "LINE OUTñ are red now.
The mute may be deactivated separately for the headphones outputs or the line outputs by pressing the dedicated button on the front panel or on the remote control.
For both ways simultaneously the mute may be released by pressing the ñMUTEò button on the remote control again.

THE BALANCED HEADPHONE OUTPUT

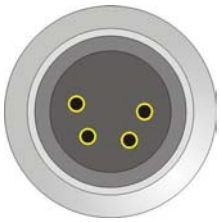

NIIMBUS HPA US 4+ offers a dedicated headphone output to connect balanced headphones. The output is situated on the front panel and comes as a gold plated 4-pin XLR socket.

Balanced Headphone Socket Pin-Out:	
Pin 1	(+) Left channel
Pin 2	(-) Left channel
Pin 3	(+) Right channel
Pin 4	(-) Right channel

UNBALANCED HEADPHONE OUTPUTS

The NIMBUS HPA US 4+ offers two stereophonic headphone outputs, each equipped with a 6.3mm (1/4") jack socket. Because HPA US 4+ has a 4 channel amplifier (2 x stereo), each socket is driven by a dedicated stereo amplifier

Unbalanced Headphone Socket Pin-Out:	
TIP	Left channel
RING	Right channel
SLEEVE	GND

Please note:

The RIGHT phone jack is connected to the in-phase stereo signal, whereas the left phone jack is connected to the 180^0 phase shifted signal.

HINT:

To protect the headphones the outputs are cut during powering on. This procedure takes about five seconds. When powering off the outputs are cut instantly.

THE LINE OUTPUTS

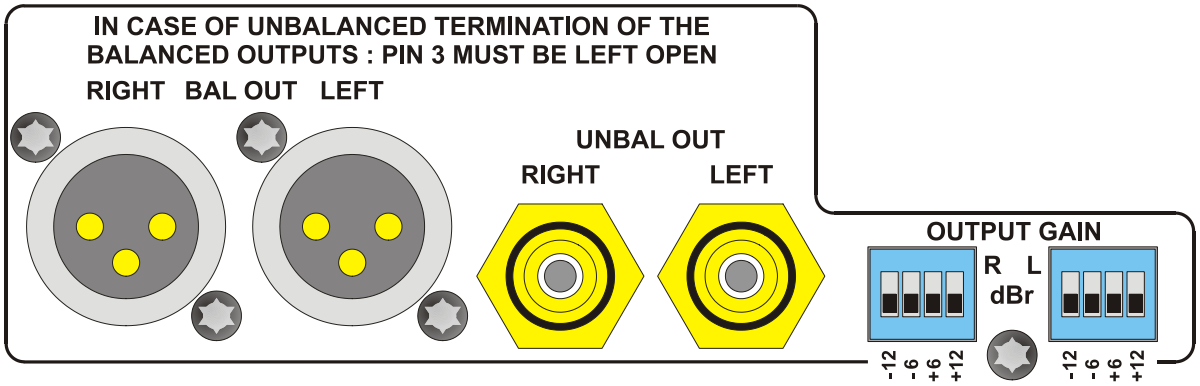

THE UNBALANCED LINE OUTPUTS

are located on the rear panel of the unit and are marked as ñUNBAL OUT LEFTò and ñUNBAL OUT RIGHTò. Gold-plated full metall premium RCA connectors are implemented here.

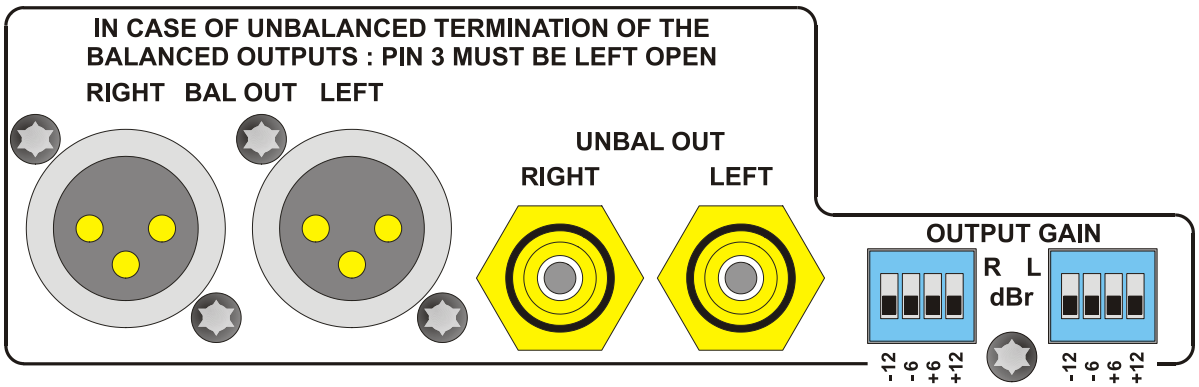

THE BALANCED LINE OUTPUTS

are located on the rear panel of the unit and are marked as ñBAL OUT LEFTò and ñBAL OUT RIGHTò. Gold-plated XLR connectors are implemented here.

Hint:

With a balanced-to-unbalanced adapter this connection may also be used for unbalanced cables. PLEASE NOTE THAT IN THIS CASE PIN 3 HAS TO BE LEFT OPEN !

Balanced Interconnection of the XLR Socket:		Unbalanced Interconnection of the XLR Socket:	
PIN 1	GND	PIN 1	GND
PIN 2	in PHASE	PIN 2	Signal
PIN 3	out of PHASE	PIN 3	OPEN !!

OUTPUT GAIN SETTINGS

The level of the activated input will appear unaltered at the line outputs.

This level may be adapted by the "OUTPUT GAIN" dip-switches in order to perfectly match the subsequent equipment.

The setting is similar to the ñPRE-GAINò setting described earlier on page 17.

The combined setting of the ñ+12 dBò and ñ+6 dBò switches will result in +15 dB gain.

The combined setting of the ñ-12 dBò and ñ-6 dBò switches will result in -15 dB gain.

Please note that output level at the unbalanced output is generally -6 dB lower compared to the balanced output.

PRE / POST FADER or FIXED-VARIABLE

The line out signal may be sourced from two different positions inside NIIMBUS UHPA US 4+.

If you want to use the activated input signal as is, maybe to source a unit with its own attenuator or a recording device, than the ñ**FIXED OUT**ò or ñ**PRE-FADER**ò mode is the right choice.
Here, the input signal is routed directly to the line outputs without any alteration from the volume attenuator. Of course you may alter the output level by using the line-out dip-switches.

If you like to operate you NIIMBUS HPA US 4+ as pre-amp device of outstanding quality to drive some active speakers or power amps, than ñ**VARIABLE OUT**ò or ñ**POST-FADER**ò is the weapon of choice.
Now, the line out signal is attenuated by the volume control of NIIMBUS HPA US 4+.
Feel free to adapt the output level by using the line-out dip-switches to optimize the attenuator travel.

Signal processing inside NIIMBUS HPA US 4+ is always unbalanced. This is no disadvantage as the so called ñfully balancedòsignal processing often generates more issues that solving them.
Further, only this method is capable to use the device also as a converter between unbalanced and balanced signals.
With you NIIMBUS HPA US 4+ you are able to feed an unbalanced signal and to listen with your balanced or single ended headphones. Also you can feed subsequent devices from the unbalanced and / or balanced line outputs.
You may also feed a balanced signal and listen to it with your balanced or single ended headphones. Simultaneously you may again use the unbalanced and / or balanced line outputs.

SWITCHING BETWEEN PRE / POST FADER

is accomplished by software:
Pushing long (> 2 seconds) the "3 - RCA" button will force the assigned white LED to flash.
The current state is displayed by the illuminated "PHONES OUT" LED = "Pre-Fader" or "LINE OUT" LED = "Post-Fader". Pushing the dedicated button will alter the state.
To end the procedure press again (> 2 seconds) the "3 - RCA" button, the white LED will stop flashing.
Ex works the unit is set to "Post Fader" operation.

ERROR REPORTING:

To ensure error-free operation and not to harm your valuable headphones in a comprehensive way your NIIMBUS HPA US 4+ is equipped with a number of protective circuits:

- During powering there is a five seconds delay to protect your headphones from possibly unwholesome noises. After the time the headphone outputs are switched to the amp.
  Also the instant cut-off after powering off is intended to protect your headphones.
- DC voltages are no good part of the output signal and must be avoided. If such are detected, the headphone sockets are cut from the electronics and the status LED is switched to red. When the DC voltage has vanished the amp will automatically return to ñnormalòoperation.
- Overload causes distorted output signals and are also harmful for the headphones. If an overload was detected, the headphone sockets are cut from the electronics and the status LED is switched to red. When the overload disappeared, the amp will automatically return to ñnormalòoperation.
- All errors will also reset when the unit is switched off and on again.
  In case that there is still an error condition the protecting circuits will keep the error mode and the status LED is red.

SOFTWARE

Some helpful parameters are adjustable via software.
If you are lost in the menus you may

RETURN TO THE DEFAULT SETTINGS

by pushing the ñ1 - XLRñbutton for some seconds during powering on.
All LEDs are illuminated as long as the ñ1 - XLR" button is pushed.
After releasing the button the unit is set to default state.

Menu 1 ï LED brightness

Pushing long (> 2 seconds) the "1 - XLR" button will force the corresponding white LED to flash.
Pushing the "PHONES OUT" button will decrease the brightness.
Pushing the "LINE OUT" button will increase the brightness.
When is desired brightness was achieved the result is stored and the procedure is finished by pushing again the "1 - XLR" button for two seconds, the white LED will stop flashing.
Eight steps of brightness are accessible, default is step 3.

Menu 2 ï Speed of the motorized volume control

Pushing long (> 2 seconds) the "2 - RCA" button will force the corresponding white LED to flash.
Pushing the "PHONES OUT" button will decrease the speed.
Pushing the "LINE OUT" button will increase the speed.
When is desired speed was achieved the result is stored and the procedure is finished by pushing again the "2 - RCA" button for two seconds, the white LED will stop flashing.
Eight steps of speed are accessible, default is step 3.

Menu 3 ï Switching between pre/post fader (fixed/variable level) of the line outputs

Pushing long (> 2 seconds) the "3 - RCA" button will force the corresponding white LED to flash.
The current state is indicated by the LEDs for
"PHONES OUT" = Pre-Fader (fixed level) or
"LINE OUT" = Post-Fader (variable level).
Pushing the appropriate button will change the setting.
The procedure is finished by pushing again the "3 - RCA" button for two seconds, the white LED will stop flashing.

Menu 4 ï Altering the address of the remote control

Pushing long (> 2 seconds) the "PHONES OUT" button will force the corresponding white LED to flash.
The current state is indicated binary by the INPUT SELECT LEDs.
By pushing the "LINE OUT" button the setting may be altered.
The procedure is finished by pushing again the "3 - RCA" button for two seconds, the white LED will stop flashing.

1 - XLR off	2 - RCA off	3 ï RCA off	Address 0, remote functions switched off
1 - XLR on	2 - RCA off	3 ï RCA off	Address 1, NiiMBUS remote "Headphone Ampñ DEFAULT !!
1 - XLR off	2 - RCA on	3 ï RCA off	Address 2, reserved
1 - XLR on	2 - RCA on	3 ï RCA off	Addrese 3, reserved
1 - XLR off	2 - RCA off	3 ï RCA on	Address 4, reserved
1 - XLR on	2 - RCA off	3 ï RCA on	Address 5, ñOne-For-Allñremote for headphone amps (Code 137)
1 - XLR off	2 - RCA on	3 ï RCA on	Address 6, ñOne-For-Allñremote for D/A converters
1 - XLR on	2 - RCA on	3 ï RCA on	Address 7, all addresses

yellow indication means LED on / default setting is address 1 .

Things to know é

Why makes it sense to make such huge efforts ?

A headphone amplifier is a device designed to condition audio signals with regard to the very specific requirements of headphones. This doesn't sound too spectacular at the first glance and can be achieved relatively easily. As with many things however, the devil is in the details and much more effort is required to design **one** amplifier for **all** current headphone models.
Headphones per se are quite diverse, and there are two essential parameters: impedance and sensitivity. In general, headphones with higher impedance can be regarded as less sensitive than headphones with low impedance (which is not generally true, but in the majority of cases). The sensitivity of headphones is usually stated in dB (sound pressure level) per Milliwatt.
Extremes in this sense are the AKG K1000 with 74dB/mW on the one hand, and the Sennheiser HD25 with108 dB/mW on the other hand: The K1000 requires 2500 times the power to achieve the same sound pressure as the HD25.
There is also the fact that headphones with high impedance usually require much higher voltage to achieve high loudness. Thus the amplifier *must* be designed with high internal supply voltages.

Which advantages do balanced signals offer ?

In contrast to unbalanced signals, balanced signals are carried by two wires (plus ground/shield). In the transmitting device, a balanced signal is created by generating an inverted original signal (180Ě phase shifted). The "hot" wire carries the original signal (a), the "cold" wire the inverted signal (-a). In the receiving device, the balanced signal is processed by a differential amplifier, which detects the difference between both:

(a) ï (-a) = 2a.

On its way between devices, the useful signal can be affected by interference (s). Interferences however are in phase on both wires and fed to the differential amplifier as well. Again, the amplifier detects the difference between the interference contents: (s) ï (s) = 0. Thus - in an ideal situation - all interference on the signal path is eliminated.

Why are discrete signal paths important ?

Twin op-amps are the most common design for operational amplifiers, i.e. two amplifier circuits are integrated in one device. If left- and right-channel signals are processed simultaneously by such a device, interaction between both cannot be excluded. This interaction is admittedly diminutive, but should be avoided whenever a different design offers the possibility.

Why are op-amps ideal for low-level signal processing ?

Discrete amplifiers (designed with transistors) are very popular in high-end audio design also for preamplifier stages. This is often marketed as an optimization measure, but the partially exorbitant extra expenses are of course to be paid by the customer. But an op-amp consists of transistors as well... Moreover, its structure has the advantage of thermal coupling between its internal components. Also ageing issues play a much less important role. Due to the large number of op-amps types offered, it is possible to pick an optimum type for any specific application.

Why does PRE-GAIN make sense ?

Two extreme examples (with the HPA US 4+ with +2 dB gain (factor 1.5), volume control set to full):

1st example:

The (pre-) amplifier provides 6V output voltage, whereas the headphone requires only 1V for 100 dB sound pressure level.

With the control fully turned up, the US 4+ would deliver 8-9 V output at +2 dB gain. Therefore the volume control would have to be operated very carefully in order to avoid hearing damage. Moreover, any interference at the input should be avoided since it would be "unforgivingly" amplified as well.

With PRE-GAIN, the input level can be reduced by 12 dB (a fourth), with 1,5 V instead of 6 V input level as the result. This 1.5 V is again amplified by 2 dB, then equalling around 2 - 2.5 V. Now the volume control can be turned over almost the entire range.

2nd example:

The (pre-) amplifier provides 1 V, whereas the headphone requires 20 V to release 100 dB of sound pressure.

With the volume control fully clockwise, the US 4+ would provide around 1,5 V at +2 dB gain only - much too low for the headphone. By means of PRE-GAIN, input level can be boosted by 24 dB (sixteen-fold), resulting in effective 16 V input voltage instead of 1 V. These are again multiplied by 2 dB or factor 1.5, now equalling 24 V. This is more than enough to drive the headphone.

Why does frequency bandwidth limiting make sense ?

In signal processing, sound is represented by AC voltages. Sound is audible - for young people - from about 20 to 20000 Hz. The elder the listener, the less he will hear high frequencies in particular.
In order to transmit these frequencies at optimum quality, the frequency response of an amplifier should be as wide and as "flat" as possible. At the low end of the scale, this limit is represented by DC, as there is no frequency lower than zero. In upward direction, the limit can be set to practically any frequency, but the higher, the more susceptible the device becomes concerning electro-magnetic interference. This is not audible in the first place, but may interfere with the useful signal and then become evident. Therefore, unrestricted frequency response attests thoughtlessness rather than remarkable engineering skill.

Why a good attenuator is essential ?

ñNormalòdevices do have a volume potentiometer which is a mechanical control element, it can be obtained on the market at any low price. Meanwhile it is often replaced by electronic circuitry, often exhibiting essential disadvantages concerning dynamic range, noise and distortion.
Conductive-plastic resistive tracks, high-quality multi-tap wipers and separated chambers for the individual sections are highly desirable for sophisticated applications, and high quality is inevitable to ensure trouble-free operation for years. Since the market for really good pots is a small one, manufacturers like Noble or Panasonic don't offer these any more. A current sample of top of the line pots is the RK27 by ALPS, which is used in the ñlittle brotherò of US 4+.

About the sophisticated volume control of HPA US 4+

It offers a just normal looking big knob on the front panel. To enable the same touch and feel of standard solutions we are using a motor driven potentiometer. Due to a friction clutch between motor and potentiometer, manual and remote operation of the knob at the same time is possible without the risk of damage (although not usefulé).
The potentiometer has nothing to do with the analogue signals from HPA US 4+ but generates a control voltage which is transferred into the digital domain by an analogue-to-digital converter and fed to a micro controller which generates the digital word to control a 256 step relay attenuator.
The relays are very special ñReed Relaysò. Here, the switching contacts are situated in a glass tube filled with a protective gas. The contacts are actuated by a magnetic field.
The 256 steps are realized with 8 relays per channel because $2^8 = 256$.
Each step is defined as 0.4 dB which totals in over 100 dB attenuation range.
The contacts of the relays are switching between resistors with an accuracy of 1% or 0.1% to attenuate the signal. So best channel matching and minimal crosstalk is realized ï and the relays will never scratch.

Why is a low output impedance essential ?

When actuated, electro-dynamic systems respond with a counterforce. When the voice coil of a headphone has been displaced by the signal, an (error-) current will be induced when it swings back to its initial position. This current must be suppressed as far as possible, which is effected best if the amplifier's output impedance is the lowest possible. The damping factor describes nothing but the ratio between the output impedance of an amplifier and a given load.
Since there is no known technical specification, we define the load (voice coil impedance) as 50 ohms.
With HPA US 4+ having an output impedance of < 0.2 ohms in balanced mode and <0.1 ohms in unbalanced mode this results in a damping factor of 250 (balanced) and a
damping factor of 500 (unbalanced).

Why are high supply voltages essential ?

A headphone doesn't really require high power, but from the equation $P = U^2 / R$ we can see that the square of the supply voltage determines the power into a given load resistance. The higher the headphone's impedance, the more voltage will be needed to achieve high listening levels. But this deals with the achievable loudness to a limited extent only: Technically spoken, music lives on fast transients which put high demands on signal processing. And thus a fast transient can easily push an average amplifier with +/-15 volts supply to its limits (90 % of all headphone amps in the market are operated with these or even lower supply voltages). Due to the high supply voltage and the balanced operation mode of HPA US 4+ you will benefit from nearly 4 times more output voltage swing capability compared to single ended amps with ñstandardò supply voltage.

Why does a relay make sense when switching power ?

Amplifiers generate unwanted output signals when applying or removing power, which can damage the connected headphones. The relay breaks the connection between amplifier and headphone and thus protects the latter until electrical conditions have stabilized.

DISPOSAL

Disposal of Old **E**lectrical & **E**lectronic **E**quipment - WEEE Regulation

(Applicable in the European Union and other European countries with separate collection systems)

This symbol on the product or on its packaging indicates that this product shall not be treated as household waste. Instead it shall be handed over to the applicable collection point for the recycling of electrical and electronic equipment.
By ensuring this product is disposed of correctly, you will help prevent potential negative consequences for the environment and human health, which could otherwise be caused by inappropriate waste handling of this product.
The recycling of materials will help to conserve natural resources.

For more detailed information about recycling of this product, please contact your local Civic Office, your household waste disposal service or the shop where you purchased the product.

TECHNICAL DATA NIIMBUS HPA US 4+

All values RMS unwtd., 20 Hz - 20 kHz, Pre-Gain set to 0 dB

Input Parameter

Inputs (stereo, analogue):	1 x XLR female, balanced
	2 x RCA, unbalanced
Max. input voltage:	+ 21 dBu
Input impedance:	10 kohm

Line Out Parameter

Line outputs (stereo, analogue):	1 x XLR male, balanced
	1 x RCA, unbalanced
Line-Out gain:	-12 / -6 / 0 / +6 / +12 dBr
Max output voltage:	+ 21 dBu
Output impedance:	< 1 Ohm

Headphone Amp Parameter

Nominal input sensitivity:	+6 dBu
Amplifier gain:	-4 dB unbal / +2 dB bal
PRE-GAIN:	-15 / -12 / -6 / 0 / +6 / +12 / +18 / +24 dBr
Frequency range:	5 Hz ... 250 kHz (- 0,5 dB)
Balance:	+/- 6 dB, only effective on the right channel
Output impedance:	0,1 Ohm unbal / 0,2 Ohm bal
Damping factor (Load 50 Ohm):	500 unbal / 250 bal
Dynamic range:	> 135 dB (A-wtd)
Noise:	< -104 dBu (A-wtd)
THD+N (1kHz/2x10V/100R = 1W):	< -104 dB / < 0,00063 %
THD+N (1kHz/2x4V/32R = 0,5W):	< -103 dB / < 0.00071 %
Crosstalk:	-105 dB (1 kHz) / -103 dB (15 kHz)
Headphone outputs:	1 x 4-pol XLR
	2 x ¼ñ(6.3 mm) Klinke

Max. output level:

Conditions:
Balanced output operation
Both channels loaded
(1kHz / < 0.1% THD+N)

R_L	U_a (dBu)	U_a (V)	P_a (mW)
600	32,4	32,4	1750
300	31,6	29,5	2900
100	30,4	25,6	6500
50	27,7	18,8	7000
32	24,8	13,4	5600
16	19,4	7,2	3200
8	13,3	3,6	1600
4	7,3	1,8	820

Mains voltage:	230 V AC / 115 VAC max. 50 VA
Front, Back:	10 mm / 3 mm Aluminum, black anodized
Case:	2 mm sheet steel, powdered
Case dimensions:	351 x 59 x 248 mm / 13,82 x 2,32 x 9,76 ñ(W x H x D)
Overall dimensions:	351 x 82 x 275 mm / 13,82 x 3,23 x 10,83 ñ(W x H x D)

Dismantling / Jumper Settings

Please note:
In the following, the internal settings of the HPA US 4+ are discussed.
For changing these, a TORX T10 screwdriver is required and you should by all means

PULL THE MAINS PLUG !!!

Only thereafter the settings can be altered without any hazard.

Dismantling

1. Remove the magnetic covers from both sides - this is best done from behind
2. Screw off both upper screws from the back plane and
   2 x 3 screws from the left and right side of the upper lid

3. The lids are situated in a groove of the front panel.
   Lift the upper lid from the back end and slide it back some millimeters to remove it
4. Now lift the upper lid
5. Make your personal jumper settings
6. Reassemble the unit in reverse order

SETTINGS on NIIMBUS US 4 / US 4+

(leave all other settings as they are - except you know exactly what you are doing)

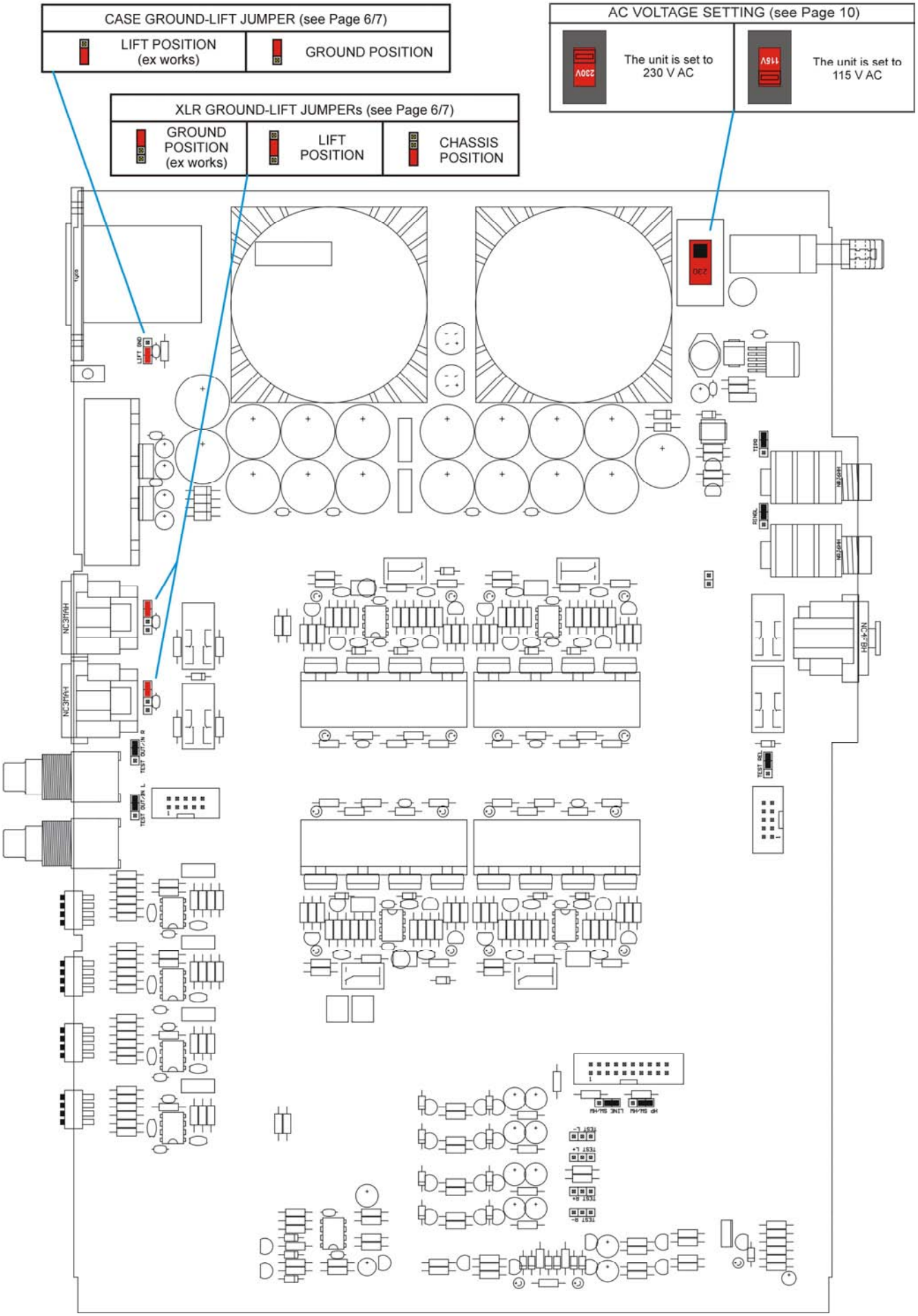

SETTINGS on NIIMBUS US 4+

(leave all other settings as they are - except you know exactly what you are doing)

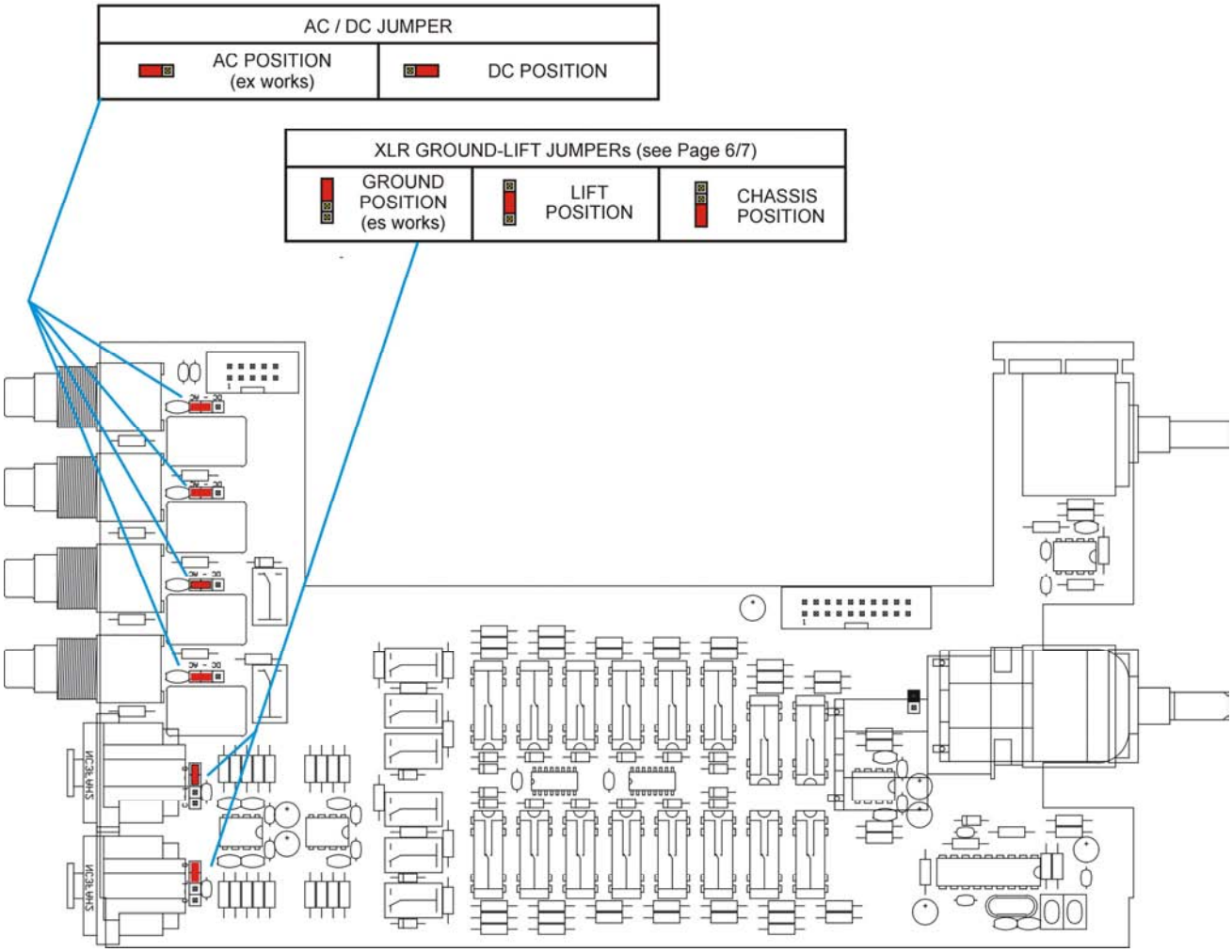

EC CONFORMITY STATEMENT:

We herewith declare that the following unit

Name: **NIIMBUS HPA US 4+**

Serial No. : -all -

is in conformity with the following EC directives:

2006/95/EG	Low voltage directive
20014/30/EC	EMC directive
EN 60065:2002+A12:2011	Security directives for audio-,
JIS C6065:2013	video- und similar electronic devices
2001/95/EC	General Product Safety Directive

For verification of conformity with regard to electromagnetic compatibility the following harmonized standards are applied:

EN 50081-1:1992	Generic emission standard
EN 50082-1:1992	Generic immunity standard

Product family standard for audio, video, audio-visual entertainment apparatus:

EN 55013:2001 **EN 61000-3-2:2000**

EN 55020:2002 **EN 61000-3-3:1995**

2011/65/EU, RoHS directive

2012/19/EU, WEEE directive / Member No.: DE 26076388

This declaration is given under responsibility of:

LAKE PEOPLE *electronic GmbH*
Turmstrasse 7a
D-78467 Konstanz
Fon +49 (0) 7531 73678
Fax +49 (0) 7531 74998

Konstanz 04.12.2018 Fried Reim CEO

WARRENTY

Since 1986 we are constructing and manufacturing sophisticated electronics for ambitious customers. Since the early beginnings we are trying hard by accompanying measures, the use of 1st choice components and multiple quality checks during production to avoid faults at large.
We are quite effective in that and this is ï amongst others - why we enjoy such a good reputation.
Despite all accurateness faults may appear which may derogate the proper operation of your product.

In this case your unit is protected by a **5-year Warranty !**

Needless to say that we will care for your product even after the expiration of the warranty.
If it is necessary please dispatch your item to:

Lake People electronic GmbH
Turmstrasse 7a
78467 Konstanz
Germany

Fon +49 (0) 7531 73678
Fax +49 (0) 7531 74998
E-Mail info@lake-people.de
Web www.lake-people.de

Your warranty claim begins with the date of purchase,
which should be denoted on your proof of purchase.
Do not forget to include the receipt of sales or a copy of the receipt.
Please also include a short description of the fault(s).
For the reshipment we need you correct address !!
Care for a safe packaging.
Best is to use the original packaging.
Please keep in mind that we cannot accept collect freight.
We will grant a quick repair and quick return of the unit.
In case of a warranty repair we will reship free of charge.

Please denote here the serial number and the date of purchase:

Serial Number	Date of Purchase